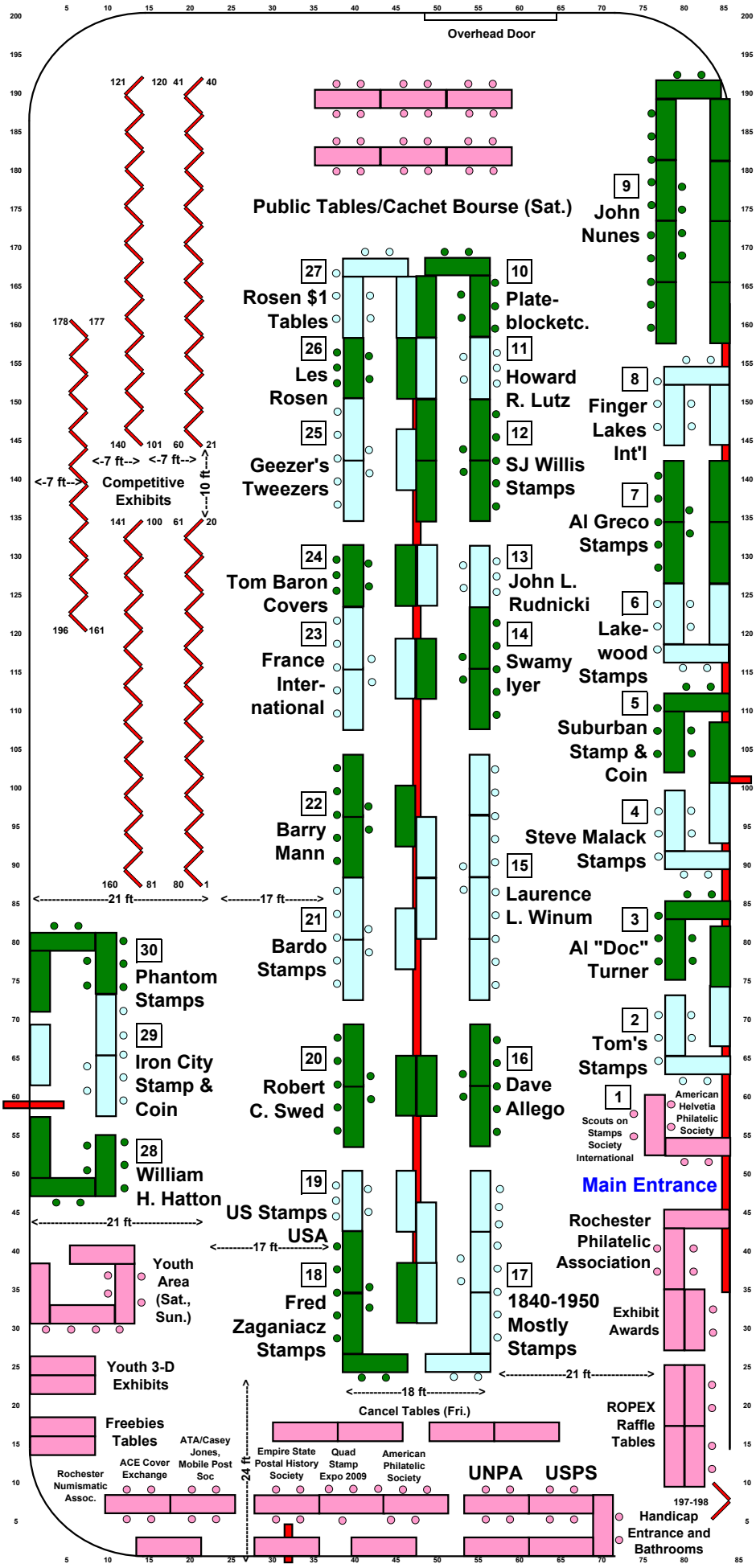
Overhead Door
Public Tables/Cachet Bourse (Sat.)
121
120
41
40
178
177
140
101
60
21
<-7 ft-->
<-7 ft-->
<-7 ft-->
Competitive Exhibits
<---10 ft--->
141
100
61
20
196
161
160
81
80
1
<----------21 ft---------->
<--------17 ft-------->
27
Rosen $1 Tables
26
Les Rosen
25
Geezer's Tweezers
24
Tom Baron Covers
23
France Inter-national
22
Barry Mann
21
Bardo Stamps
20
Robert C. Swed
19
US Stamps USA
18
Fred Zaganiacz Stamps
10
Plate-blocketc.
11
Howard R. Lutz
12
SJ Willis Stamps
13
John L. Rudnicki
14
Swamy Iyer
15
Laurence L. Winum
16
Dave Allego
17
1840-1950 Mostly Stamps
9
John Nunes
8
Finger Lakes Int'l
7
Al Greco Stamps
6
Lake-wood Stamps
5
Suburban Stamp & Coin
4
Steve Malack Stamps
3
Al "Doc" Turner
2
Tom's Stamps
1
Scouts on Stamps Society International
American Helvetia Philatelic Society
Main Entrance
Rochester Philatelic Association
Exhibit Awards
<----------21 ft---------->
ROPEX Raffle Tables
197-198
Handicap Entrance and Bathrooms
30
Phantom Stamps
29
Iron City Stamp & Coin
28
William H. Hatton
<----------21 ft---------->
Youth Area (Sat., Sun.)
Youth 3-D Exhibits
Freebies Tables
<----------18 ft---------->
Cancel Tables (Fri.)
Rochester Numismatic Assoc.
ACE Cover Exchange
ATA/Casey Jones, Mobile Post Soc
<--24 ft-->
Empire State Postal History Society
Quad Stamp Expo 2009
American Philatelic Society
UNPA
USPS